PEŠTAN
we build trust

Fluenta PRO

UGRADNI VODOKOTLIĆ
CONCEALD CISTERN

UPUTSTVO ZA UGRADNJU
INSTALLATION INSTRUCTIONS

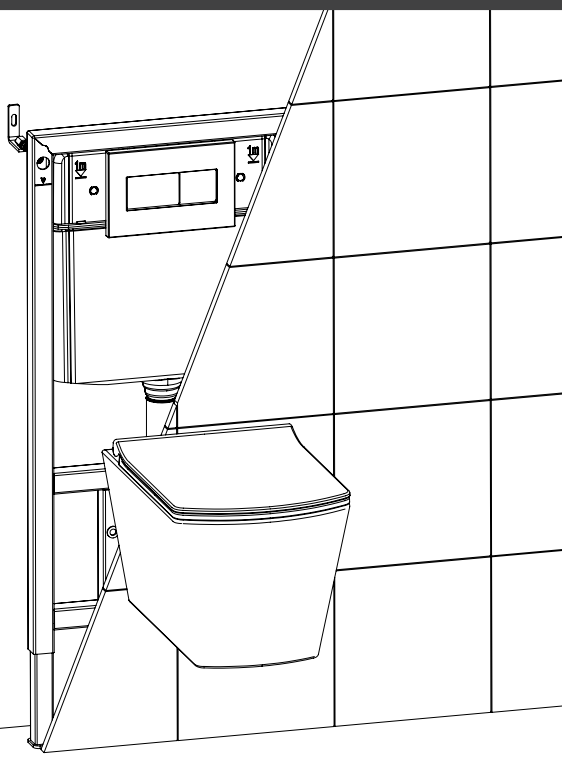

www.pestan.net

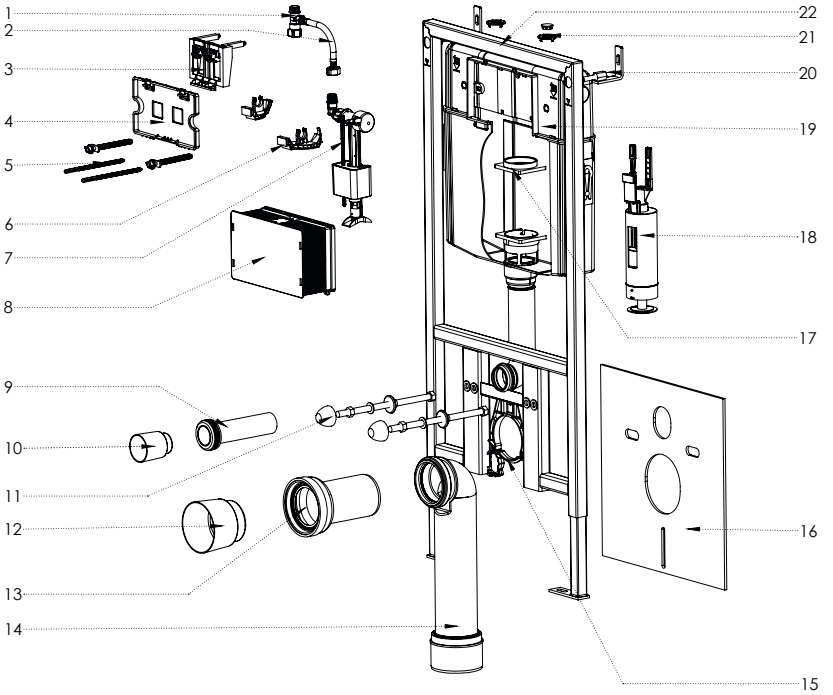

1	UGAONI VENTIL ZA DOVOD VODE 1/2 - 3/4 / STOP VALVE
2	BRINOX CREVO 1/2 - 3/8 / FLEXIBLE HOSE
3	SET AKTIVACIONIH POLUGA ISPUSNOG VENTILA / PUSH PLATE HOOK-LEVER SET
4	ZAŠTITNI POKLOPAC PROVIDNI / TRANSPARENT PROTECTION COVER
5	SET VIJAKA ZA TIPKU / PUSH PLATE SCREW SET
6	NOSAČ ULIVNOG VENTILA / FLOAT VALVE HOLDER
7	ULIVNI VENTIL 1/2 PLOVAK / FLOAT VALVE
8	ZAŠTITNA KUTIJA TIPKE / CONTROL PANEL PROTECTION BOX
9	ISPIRNA CEV / CLEAN WATER PIPE
10	ZAŠTITINI POKLOPAC ISPIRNE CEVI / CLEAN WATER PIPE PROTECTION CAP
11	SET ZA MONTAŽU WC ŠOLJE (NAVOJNE ŠIPKE) / TOILET SEAT CONNECTION SCREW
12	ZAŠTITINI POLOPAC ODVODNE CEVI / WASTE WATER PIPE PROTECTION CAP
13	ODVODNA CEV / WASTE WATER PIPE
14	ODVODNA CEV LUK 90 / WASTE WATER ELBOW PIPE
15	DRŽAČ ODVODNE CEVI / WASTE WATER PIPE BRACKET
16	IZOLACIJA ZA WC ŠOLJU / ISOLATION SHEET
17	GORNJI DRŽAČ ISPUSNOG VENTILA / OUTLET VALVE UPPER FIXTURE
18	ISPUSNI VENTIL 3/6 ZVONO / 3/6 OUTLET VALVE
19	REZERVOAR VODOKOTLIĆA / CISTERN
20	ZIDNI SET ZA MONTAŽU / WALL MOUNT SET
21	DRŽAČI UGAONOG VENTILA / STOP VALVE PLACE HOLDERS
22	METALNI OKVIR VODOKOLTIĆA / METAL FRAME AND FIXTURES

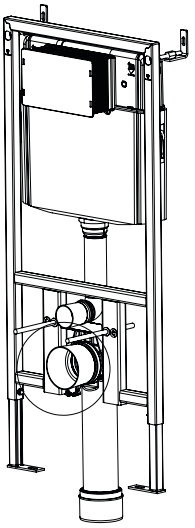

Ubacite odvodnu cevi sa lukom 90 u držač odvodne cevi. Osigurajte i učvrstite sa plastičnim poluokruglim osiguračem.

Insert the black sewer bend into the outlet adaptor and clip the top of the bend into the sewer bracket on the frame.

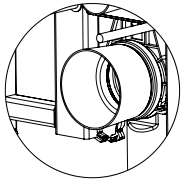

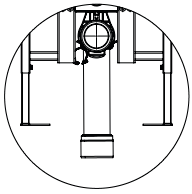

Postavite nosače WC šolje (navojne šike). Obraitite pažnju na razmak otvora na WC šolji, može biti 23cm ili 18cm. Većina proizvođača WC šolja koristi razmak od 18cm.

Fit the supplied toilet bowl support studs at either 18 cm or 23 cm centres; check your toilet bowl specifications first. Most bowls have 18 cm centres.

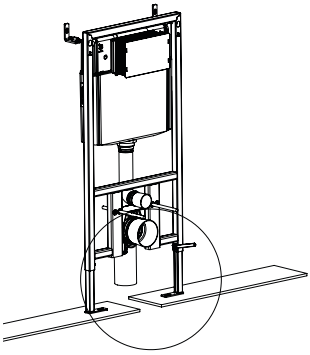

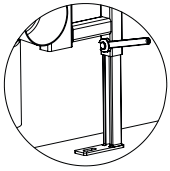

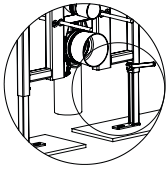

Popustite šrafove koji osiguravaju nogice vodokotlića kako biste podesili visinu. Visina vodokotlića treba da bude merena od nivoa završnog sloja keramike, najčešće 1m, što je i obeleženo na ramu vodokotlića. Svakako obavezno proverite tehničku specifikaciju i prepručenu visinu ugradnje WC šolje.

Loosen the bolts securing the adjustable feet at the base of the frame and lift the frame height to match the height from the finished floor (matching the specifications of the WC bowl being used).

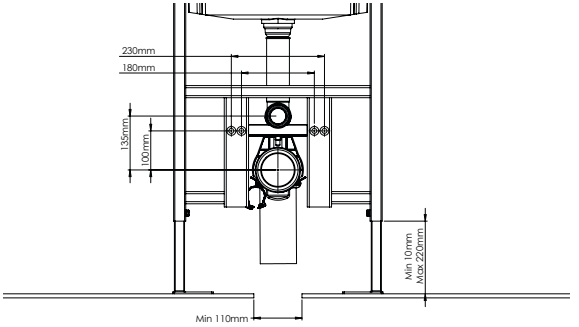

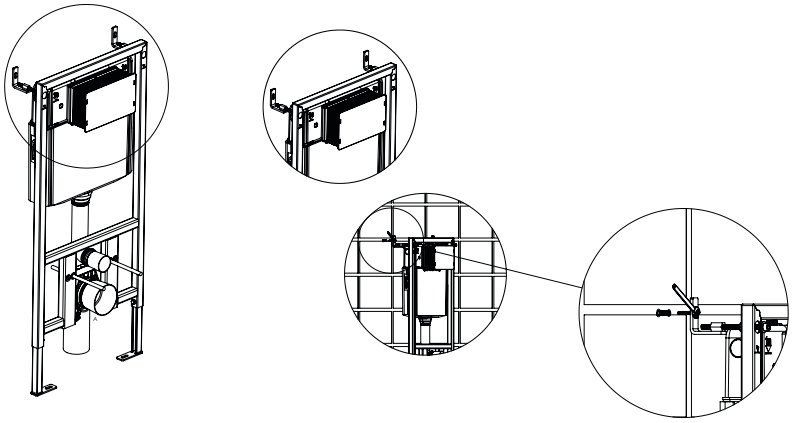

Pozicionirajte vodokotlić na zid uzimajući u obzir dovodnu cev za hladnu vodu i odvodnu cev za kanalizaciju. Labelom proverite da vodokotlić stoji ravno. Označite mesta za rupe u zidu i podu i izbušite burgijom 12mm.

Place the unit and check the position with respect to the water supply and waste pipe.Align the unit with a spirit level and mark the locations of the holes for the unit's foot brackets. Drill holes into the floor using a 12 mm drill bit.

Postavite zaštitnu kutiju tipke i providni zaštitni poklopac.
The mud guard for the control panel should be screwed on the frame.

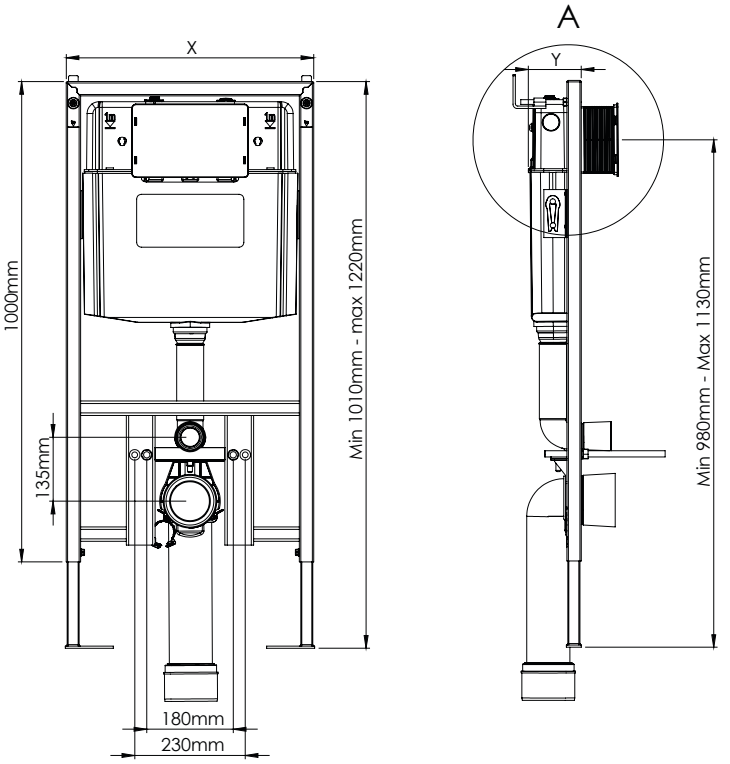

	X	Y
FLUENTA-PRO	535mm	110mm

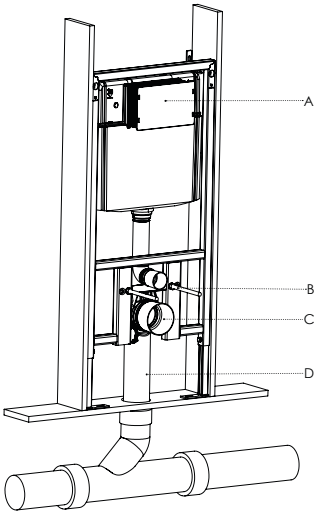

A. Obavezno postavite zaštitnu kutiju tipke i providni zaštitni poklopac.

Mud guard to protect the internal mechanisms during rough installation.

B. Navucite plastičnu zaštitu na nosače WC šolje (navojne šipke).

Rods with plastic sleeves.

C. Postavite zaštitne poklopce na ispirnu i odvodnu cev.

Pipe plugs

D. Povežite odvodnu cev na kanalizacioni vod.

Complete sewer bend connection to waste pipe.

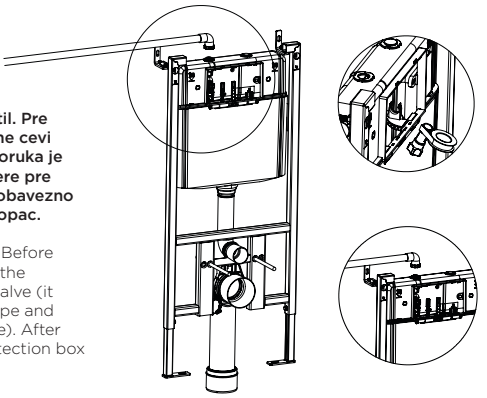

E. Povežite dovodnu cev hladne vode i ugaoni ventil. Pre konekcije obavezo očistite i isperite koleno dovodne cevi kako nečistoća ne bi dospela u ugaoni ventil (preporuka je da se pusti voda kroz dovodnu cevi i cela linija ispere pre povezivanja ugaonog ventila). Nakon povezivanja obavezno vraitite zaštitnu kutiju tipke i providni zaštitni poklopac.

Connect the cold water supply pipe and stop valve. Before connecting, be sure to clean and rinse the elbow of the supply pipe so that dirt does not get into the stop valve (it is recommended to run water through the supply pipe and flush the entire line before connecting the stop valve). After connecting, be sure to return the control panel protection box and the transparent protection cover.

Da biste odredili dužine ispirne i odvodne cevi, potrebno je odrediti dužine L1 i L2.

To determine the excess length of the pipes, place the ceramic bowl facing the wall, then push firmly until it touches the frame. Measure distances L1 and L2.

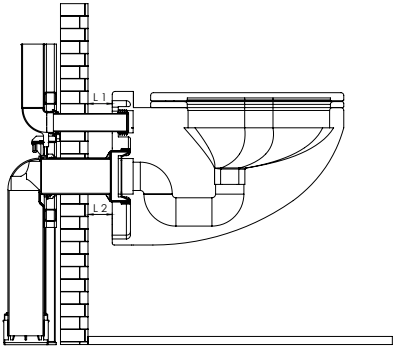

Ispirnu cevi i odvodnu cev treba skratiti prema dužinama L1 i L2.

The drain pipe and clean water pipe should be cut according to L1 and L2 dimensions.

Dužina nosača Wc šolje (navojnih šipki) treba da bude 2cm duža nakon postavljanja Wc šolje kako bi se pravilno učvrstila.

The support studs should be adjusted to a length of 2cm outside the wall so that the toilet bowl can be screwed on.

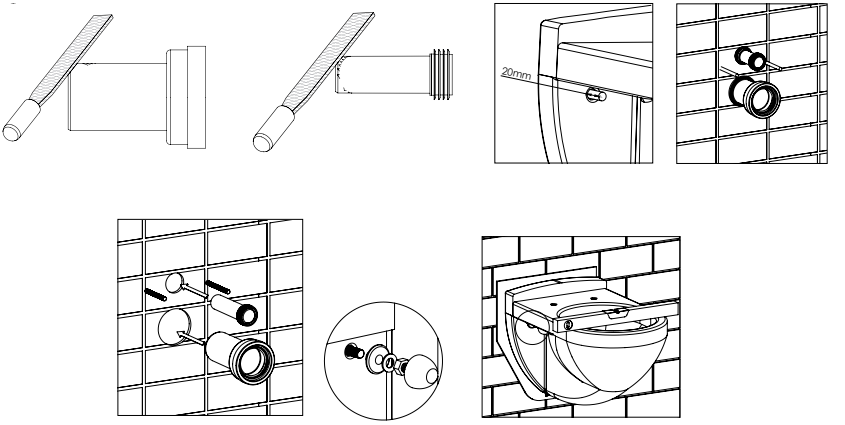

1. Ovaj proizvod je dizajniran da radi bez problema između 0,5 i 10 bara. Ova garancija će biti nevažeća ako je proizvod primoran da radi tamo gde je pritisak vode veoma visok (≥10 bara) ili veoma nizak (≤0,5 bara). Za dugotrajnu upotrebu, preporučujemo da idealan pritisak vode bude oko 6 bara. U slučaju da pritisak vode pređe 10 bara, treba instalirati regulator pritiska.

This product is designed to work fluently between 0,5 – 10 bars. This warranty will be void if the product is forced to work where there is very high (≥10 bars) or very low (≤0,5 bars) water pressure. For long term usage, we recommend the ideal water pressure to be around 6 Bars. In case the water pressure exceeds 10 bars, a pressure regulator should be installed.

2. Prljavština i ostaci koji dolaze iz glavnih cevovoda mogu oštetiti mehanizam vodokotlića i izazvati začepljenje. Da bi se to sprečilo i taloženje kamenca u mehanizmima, treba koristiti filter.

Dirt and debris coming from the main pipelines can damage the floating mechanism and cause blockage. To prevent this and lime depositing in the mechanisms, a filter should be used.

3. U slučaju da otpad upadne u vodokotlić, ventili neće pravilno funkcionisati. Da biste to sprečili, uverite se da je zaštitna kutija tipke sve vreme na proizvodu dok se ne instalira tipka.

In case a debris falls into the cistern, the valves will not function properly. To prevent this from happening make sure that the plaster cover is on the product at all times until the installation of the Push plate.

PEŠTAN
we build trust

Fluenta PRO

www.pestan.net